Bitspower®

EN ver.1

NEBULA VGA Water Block for ASUS ROG Astral GeForce RTX 5090

BPMS-VG5090ASA

Included Contents

❶ BPMS-VG5090ASA 1 PCS

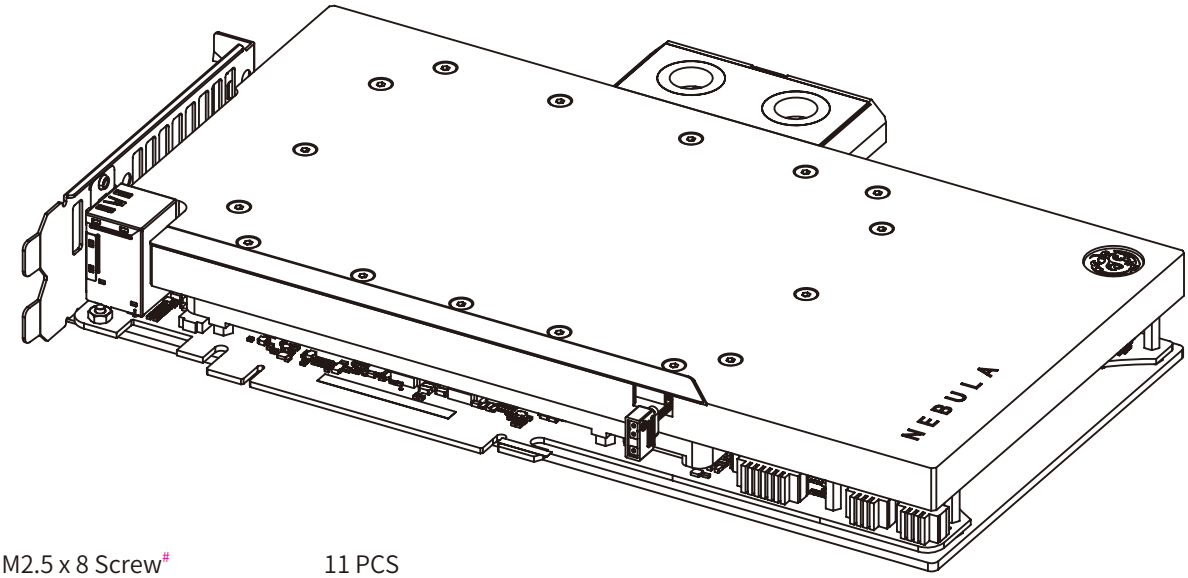

❷ M2.5 x 8 Screw# 11 PCS

#Two screws fastened in advance.

❸ M2.5 x 6 Screw# 3 PCS

#Two screws fastened in advance.

❹ M2.5 Nut 1 PCS

❺ BPA-TP1-2.5G 1 PCS

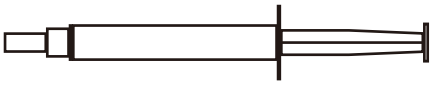

Bitspower®

⚠ Notice

- Please read and carefully follow the installation guide in this manual prior to installing. The installation of this block requires some advanced knowledge about your hardware. As such, if you feel uncomfortable with the steps involved in installing this product, please reach out to our customer support for assistance.
- We recommend the use of a leak tester, such as our Bitspower Digital Leak Detector, after completing the assembly of your liquid cooling loop to make sure there are no leaks prior to filling up your loop with coolant.
- **NEVER** use the leak tester when liquid is present in the loop or when the pump is in operation.
- **DO NOT** exceed 0.5 kg/cm^2 or 7.0 PSI when using the leak tester. Excessive pressure exerted on your loop may result in damage to your liquid cooling components.
- Bitspower is not responsible for any potential damage from the use of a leak tester.
- **NEVER** overtighten or use excessive force during the installation of any components, unless otherwise stated in the instruction. Overtightening will result in damage to your components.
- Bitspower recommends the use of our Bitspower Pellucid Coolant for the best performance of your liquid cooling setup, as well as using Bitspower Dye for your desired color. We advise against the use of pure distilled water as it may lead to the development of scale and algae over time. Avoid using any other non-recommended coolants or liquid. The use of non-recommended coolants or liquid can result in unexpected abnormalities, such as peeling of the coating on your hardware, built-up of deposit or residue that will result in clogs, tube or O-ring degradation and deformation, or improper operation of the coolant pump. Bitspower is not responsible for any issues that may arise from the use of non-recommended coolant.
- **NEVER** mix or introduce components made from different kinds of metal to your liquid cooling loop. Never use Aluminum based liquid cooling components with Bitspower products. Doing this will result in serious damage and leaks with your liquid cooling components and will void your warranty. If you have any doubts or questions about the components you are using, please reach out to our customer support for assistance.
- Bitspower reserves the right to change the design and interpretations of our products without any prior notice. Actual design and color of product may differ from what is shown on our website.

Bitspower®

Block

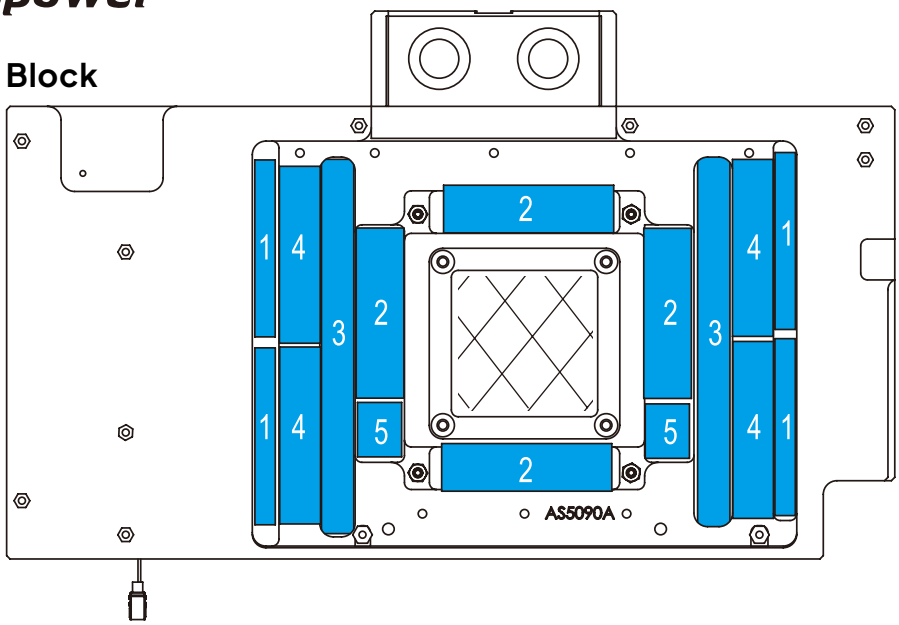

GPU(Front)

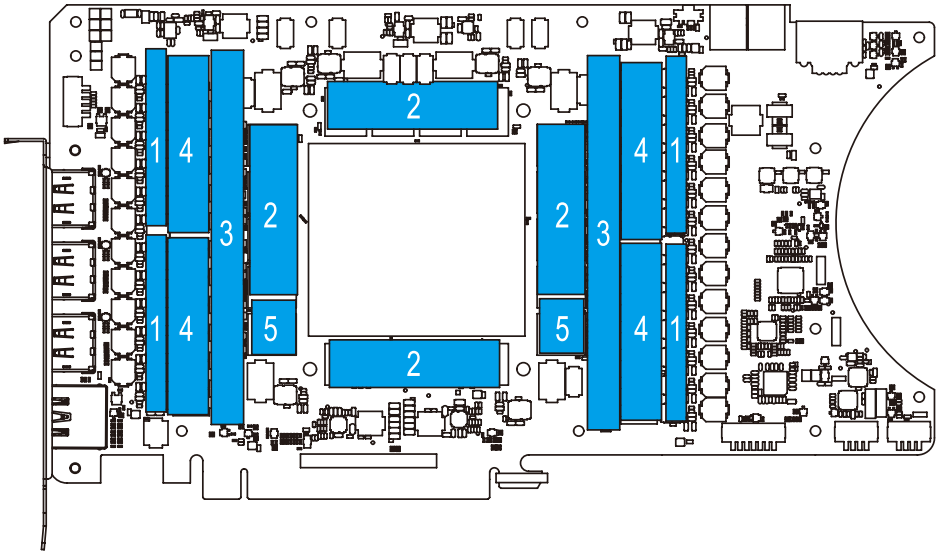

Apply a thin layer of thermal paste across the entire GPU die.(❺ BPA-TP1-2.5G)

GPU block and Backplate will come with the correct thermal pads preapplied. Please make sure to line up all pieces correctly with the Graphics card before inserting and tightening any screws. In the situation where you need to apply your own thermal pads, please apply them directly on the GPU components.

1.0 mm Thermal pad

Name	Specification	Quantity
Thermal pad 1	6×52×1mm	4
Thermal pad 2	14×50×1mm	4
Thermal pad 3	100×9.5×1mm	2
Thermal pad 4	12×52×1mm	4
Thermal pad 5	13×16×1mm	2
Thermal pad 6	93.8×19.5×1.5mm	4
Thermal pad 7	50×19.5×1.5mm	2

Bitspower®

Backplate

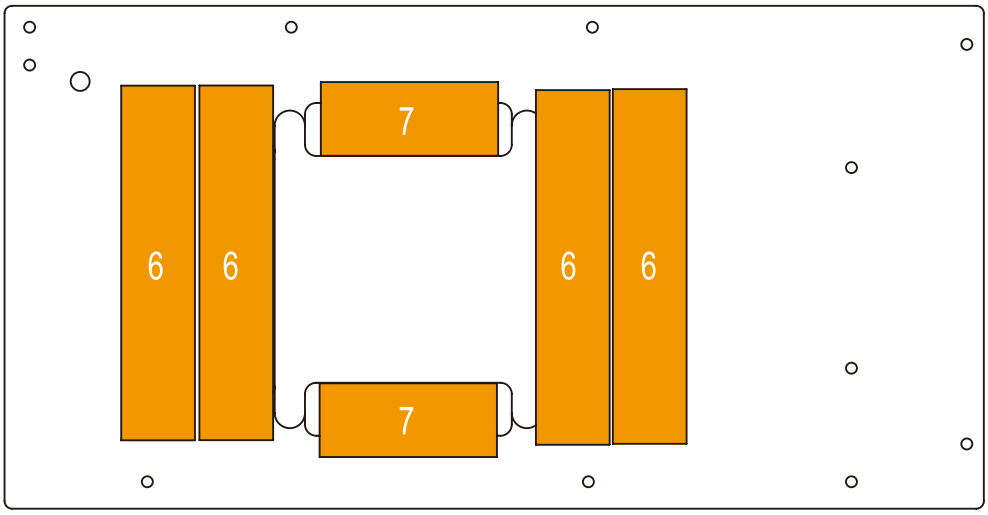

GPU(Rear)

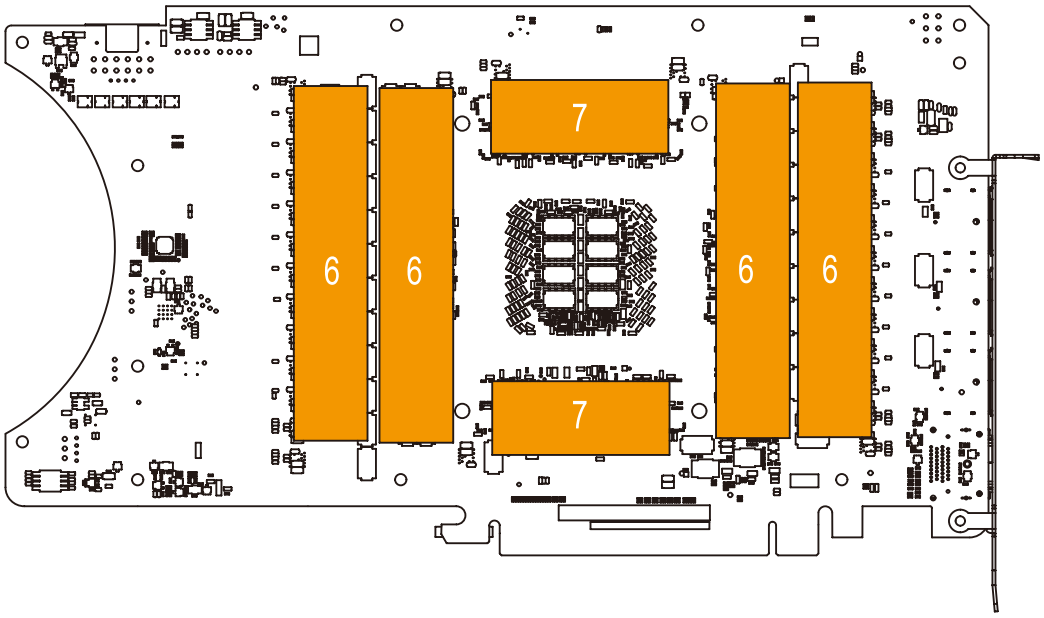

GPU block and Backplate will come with the correct thermal pads preapplied. Please make sure to line up all pieces correctly with the Graphics card before inserting and tightening any screws. In the situation where you need to apply your own thermal pads, please apply them directly on the GPU components.

1.5 mm Thermal pad

Name	Specification	Quantity
Thermal pad 1	8×12×1mm	2
Thermal pad 2	6×52×1mm	4
Thermal pad 3	14×50×1mm	4
Thermal pad 4	10×9.5×1mm	2
Thermal pad 5	12×52×1mm	4
Thermal pad 6	13×16×1mm	2
Thermal pad 7	93.8×19.5×1.5mm	4
Thermal pad 8	50×19.5×1.5mm	2

step 1

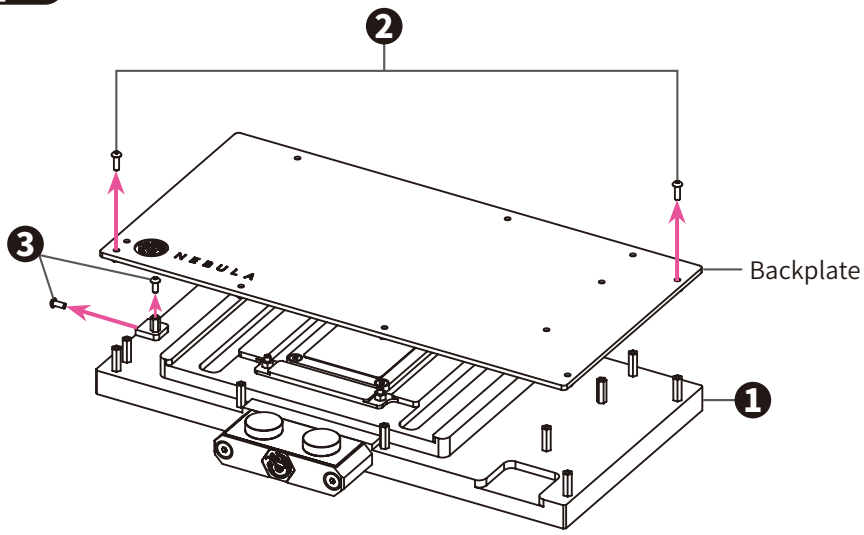

step 2

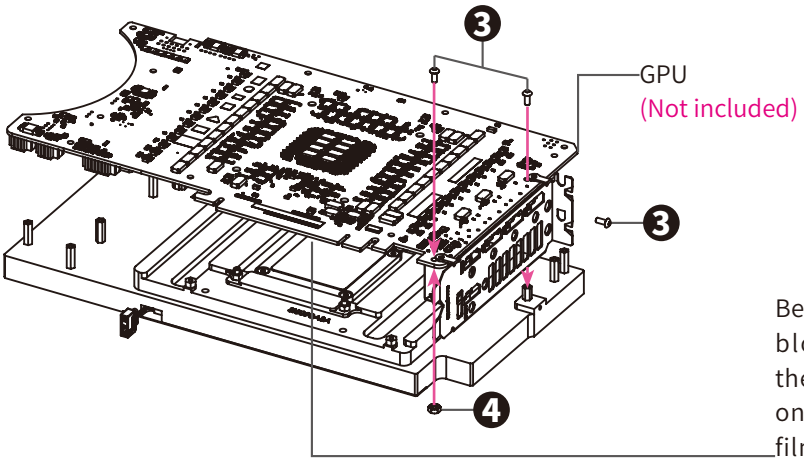

Before installing the GPU on the block, please make sure that thermal paste has been applied on GPU die, and that all plastic films on the thermal pads have been removed. Failure to do these will result in overheating.

step 3

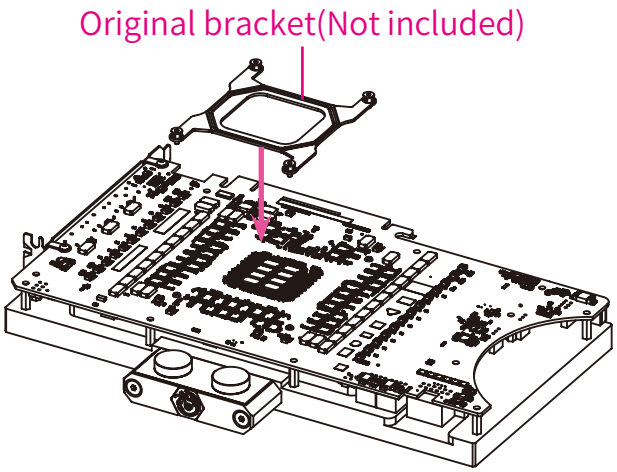

step 4

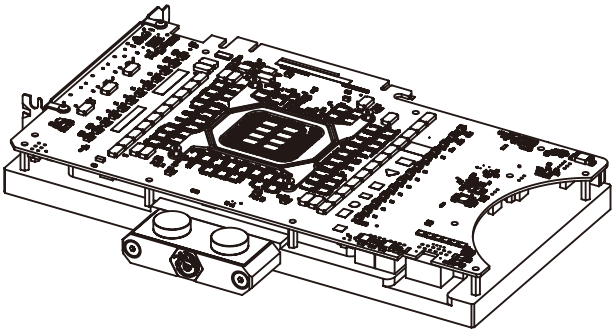

step 5

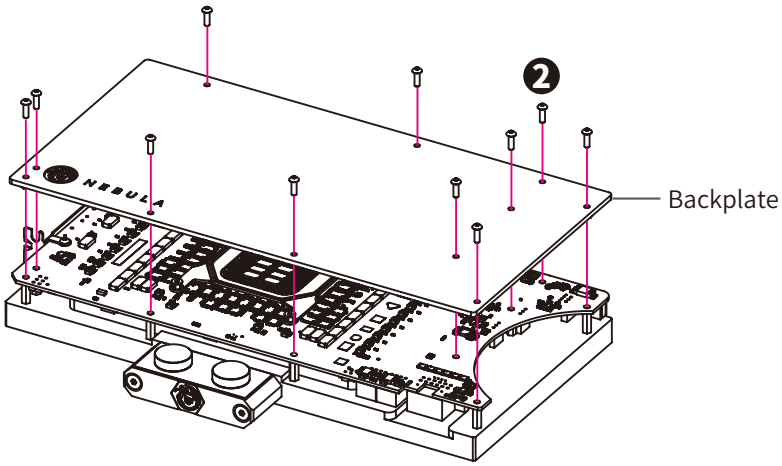

NOTE:
Remove any plastic films from thermal pads on the backplate.

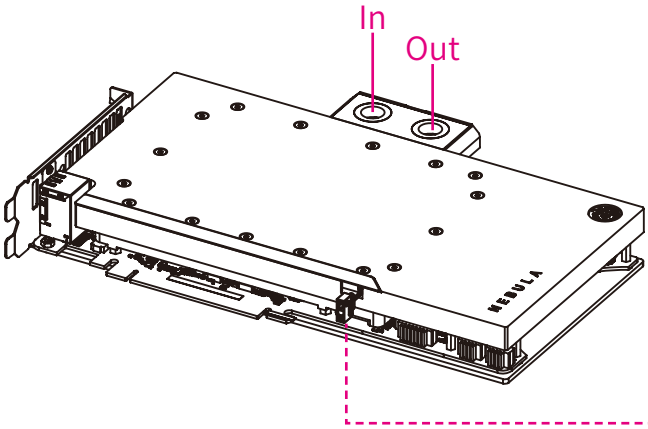

★Digital RGB PIN on ❶ motherboard or ❷ other equipment.

❶

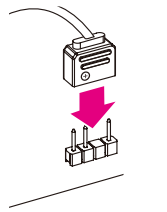

motherboard

❷ BPTA-DRGBMFC

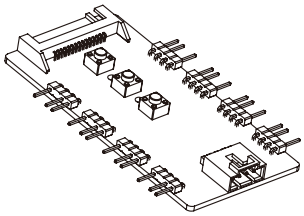

DRGB Multi Function Controller
(Not included)