Bitspower®

EN ver.4

BPTA-CPUMS-V2-SKI

Bitspower CPU Block Summit MS(Intel)

★Digital RGB PIN on ❶ motherboard or ❷ other equipment.

❶

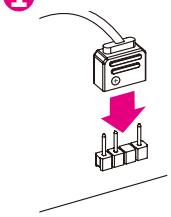

motherboard

❷ BPTA-DRGBMFC

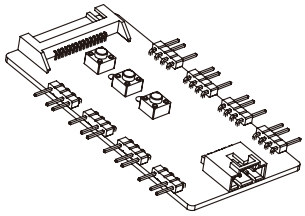

DRGB Multi Function Controller(Not included)

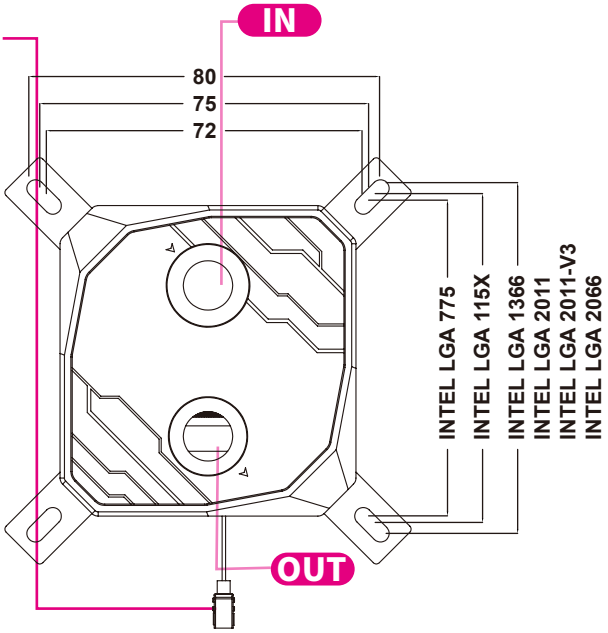

INTEL LGA 775
INTEL LGA 115X
INTEL LGA 1366
INTEL LGA 2011
INTEL LGA 2011-V3
INTEL LGA 2066

Installation 1

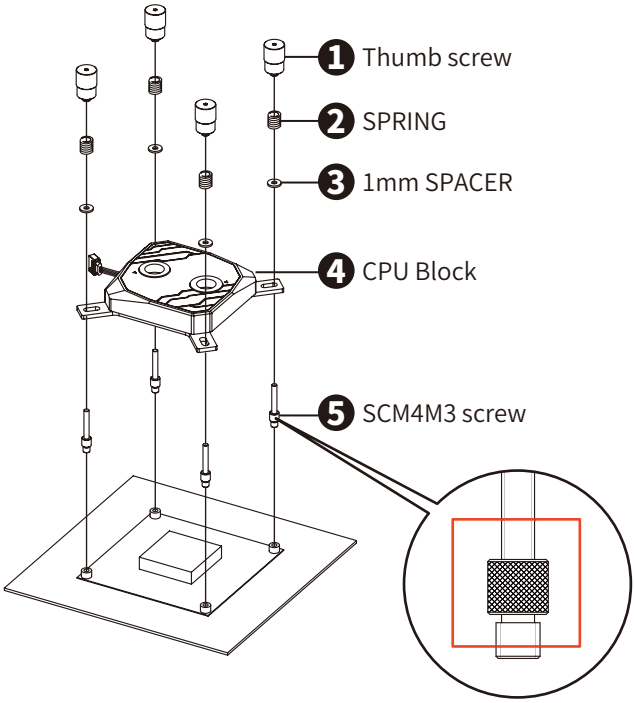

Follow the right sequence to install.

Installation 2

Follow the right sequence to install.

The thumb screw cannot be locked too tightly, the spring is slightly pressed and the gap is kept as shown below. The thumb screw cannot be rotated to the end. When the spring screws too tight, the SCM3F6 screw will be driven and will be taken away from the motherboard, which will cause the water block and CPU not to be closed well.



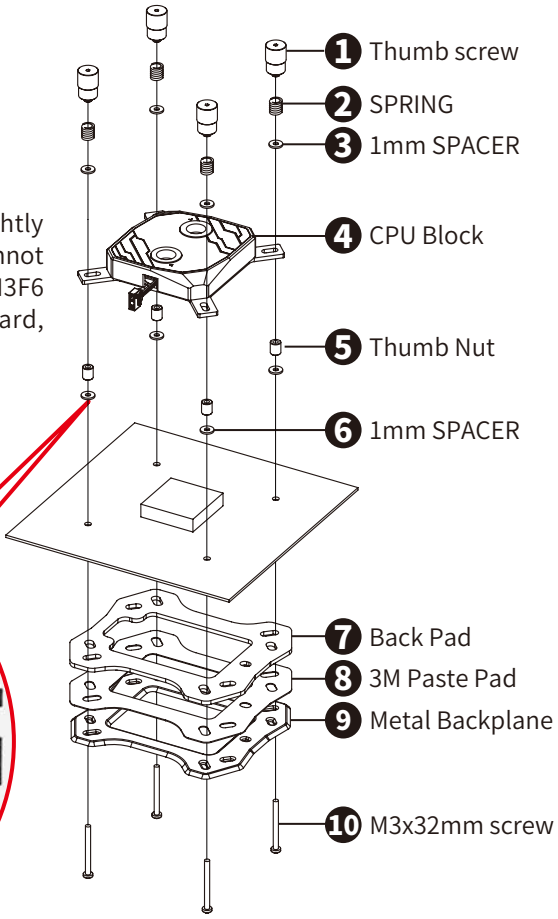

BPTA-MKCPUMS-1700

Accessories

1 1700 Backplate 1 PC

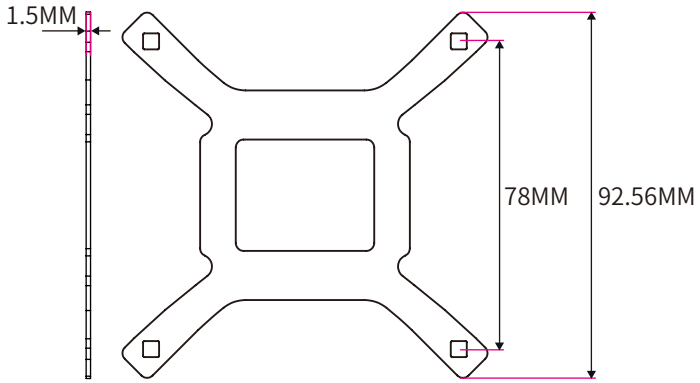

2 Adjusting Nut 8 PCS



3 Backplate Bolt 4 PCS

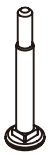

4 Washer 4 PCS



Installation 3 (for 1700)

step 1

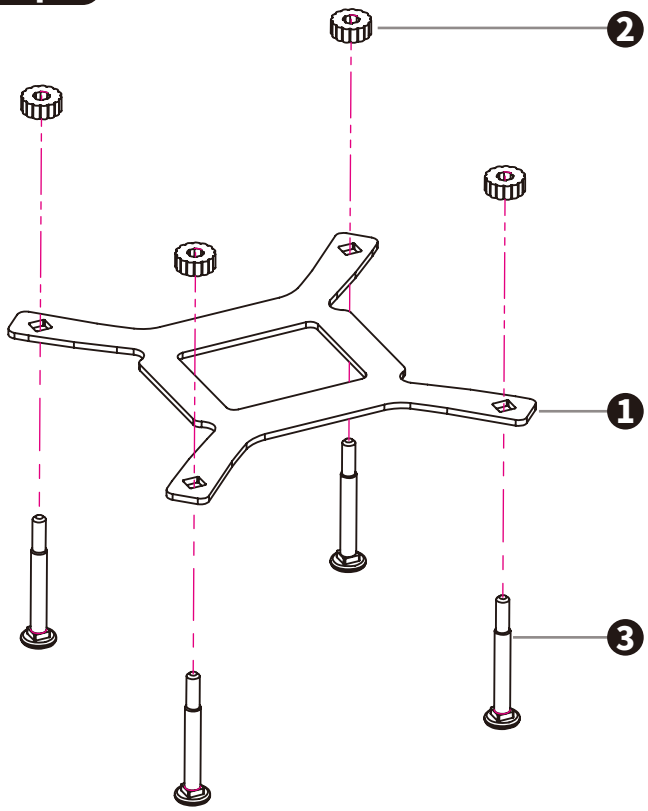

step 2

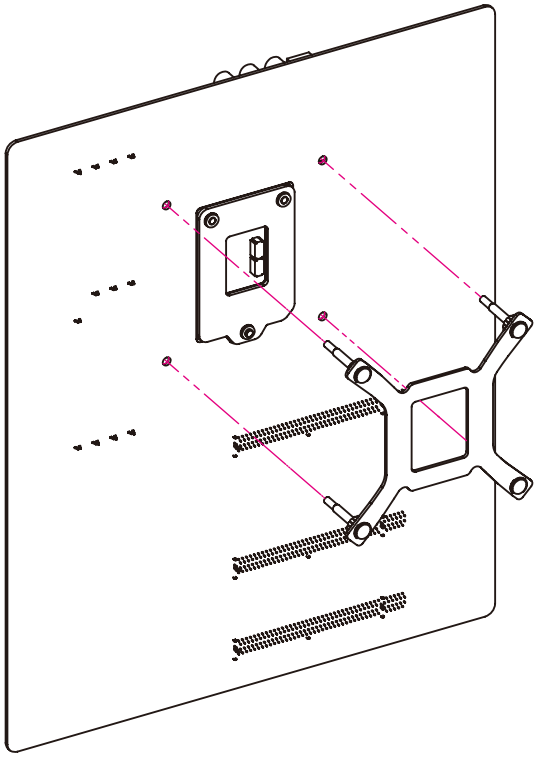

step 3

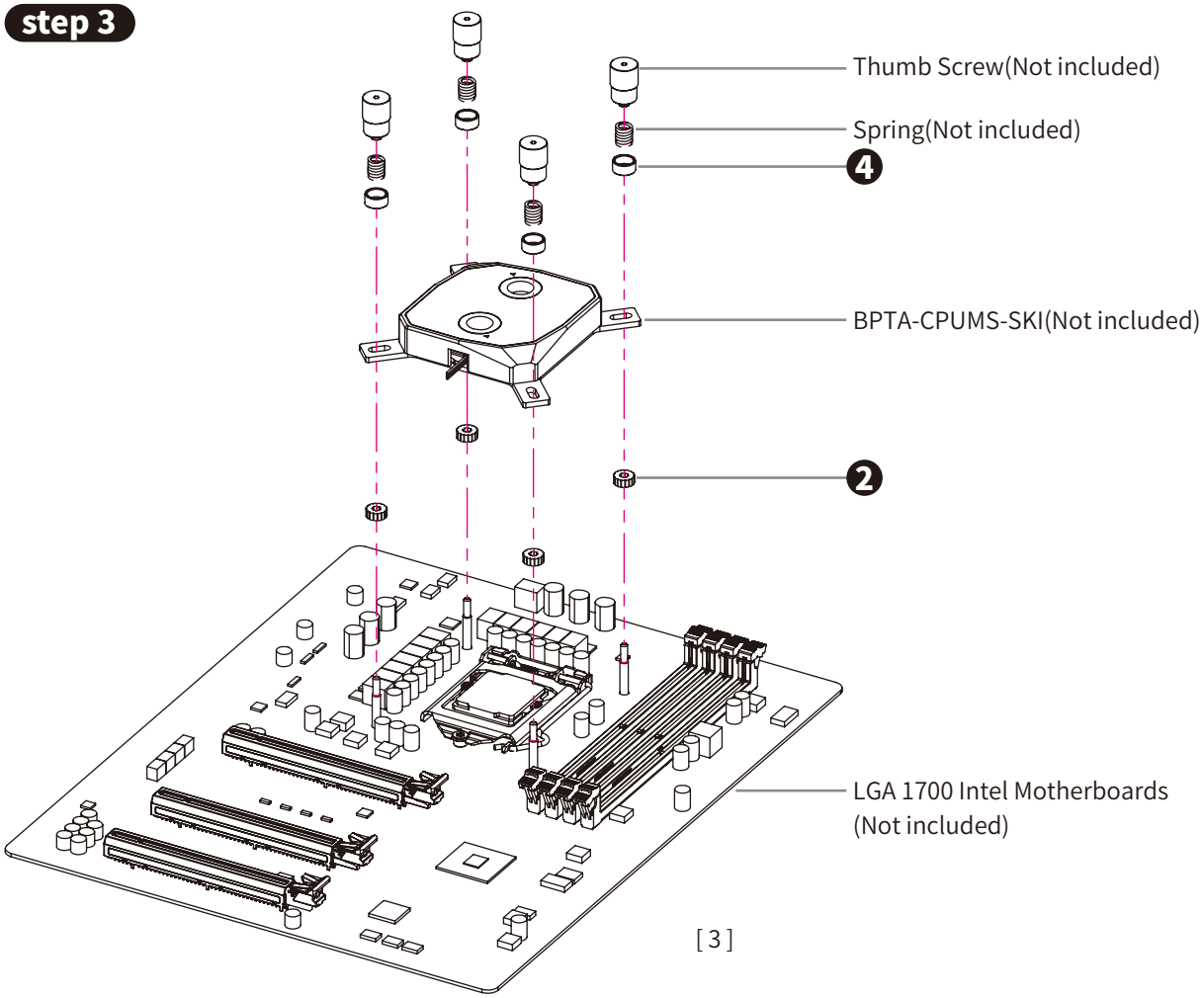

Bitspower®

⚠ Notice

- Please read and carefully follow the installation guide in this manual prior to installing. The installation of this block requires some advanced knowledge about your hardware. As such, if you feel uncomfortable with the steps involved in installing this product, please reach out to our customer support for assistance.
- We recommend the use of a leak tester, such as our Bitspower Digital Leak Detector, after completing the assembly of your liquid cooling loop to make sure there are no leaks prior to filling up your loop with coolant.
- **NEVER** use the leak tester when liquid is present in the loop or when the pump is in operation.
- **DO NOT** exceed 0.5 kg/cm^2 or 7.0 PSI when using the leak tester. Excessive pressure exerted on your loop may result in damage to your liquid cooling components.
- Bitspower is not responsible for any potential damage from the use of a leak tester.
- **NEVER** overtighten or use excessive force during the installation of any components, unless otherwise stated in the instruction. Overtightening will result in damage to your components.
- Bitspower recommends the use of our Bitspower Pellucid Coolant for the best performance of your liquid cooling setup, as well as using Bitspower Dye for your desired color. We advise against the use of pure distilled water as it may lead to the development of scale and algae over time. Avoid using any other non-recommended coolants or liquid. The use of non-recommended coolants or liquid can result in unexpected abnormalities, such as peeling of the coating on your hardware, built-up of deposit or residue that will result in clogs, tube or O-ring degradation and deformation, or improper operation of the coolant pump. Bitspower is not responsible for any issues that may arise from the use of non-recommended coolant.
- **NEVER** mix or introduce components made from different kinds of metal to your liquid cooling loop. Never use Aluminum based liquid cooling components with Bitspower products. Doing this will result in serious damage and leaks with your liquid cooling components and will void your warranty. If you have any doubts or questions about the components you are using, please reach out to our customer support for assistance.
- Bitspower reserves the right to change the design and interpretations of our products without any prior notice. Actual design and color of product may differ from what is shown on our website.